Patch-Panel-1-Narrow
PP-1-N

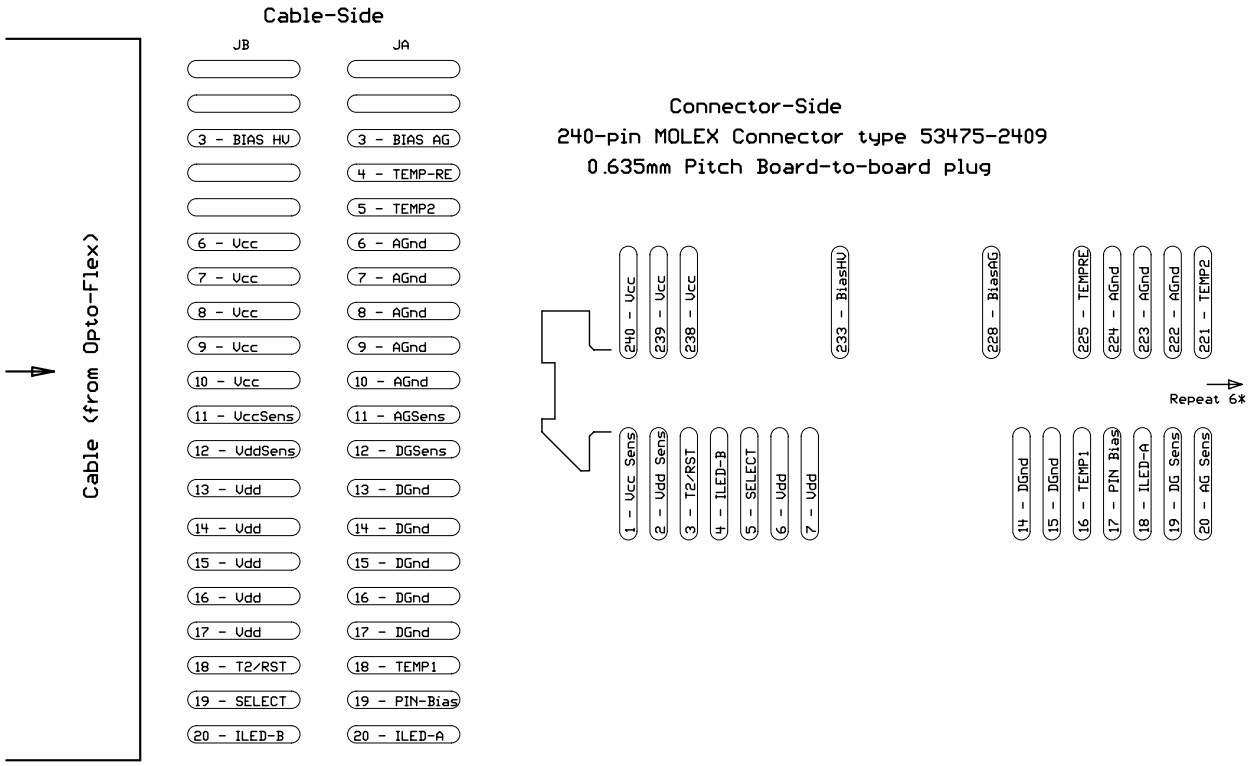
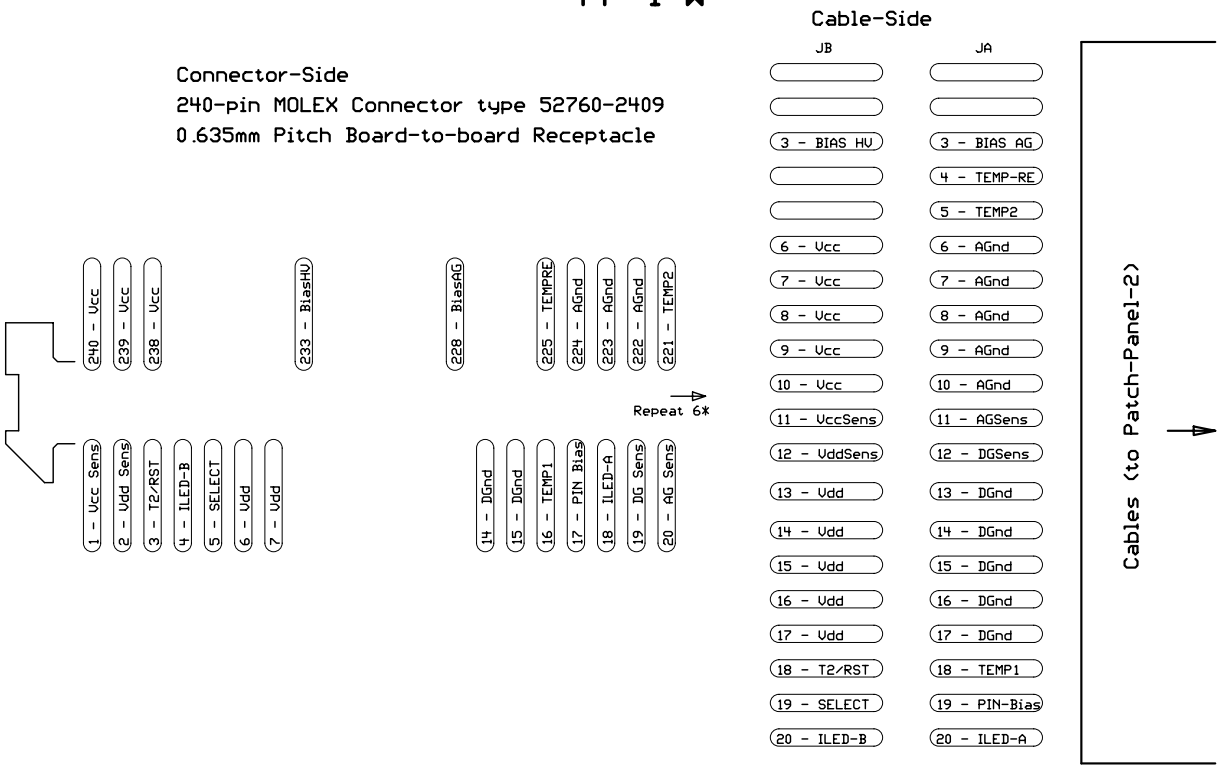
Patch-Panel-1-Wide
PP-1-W