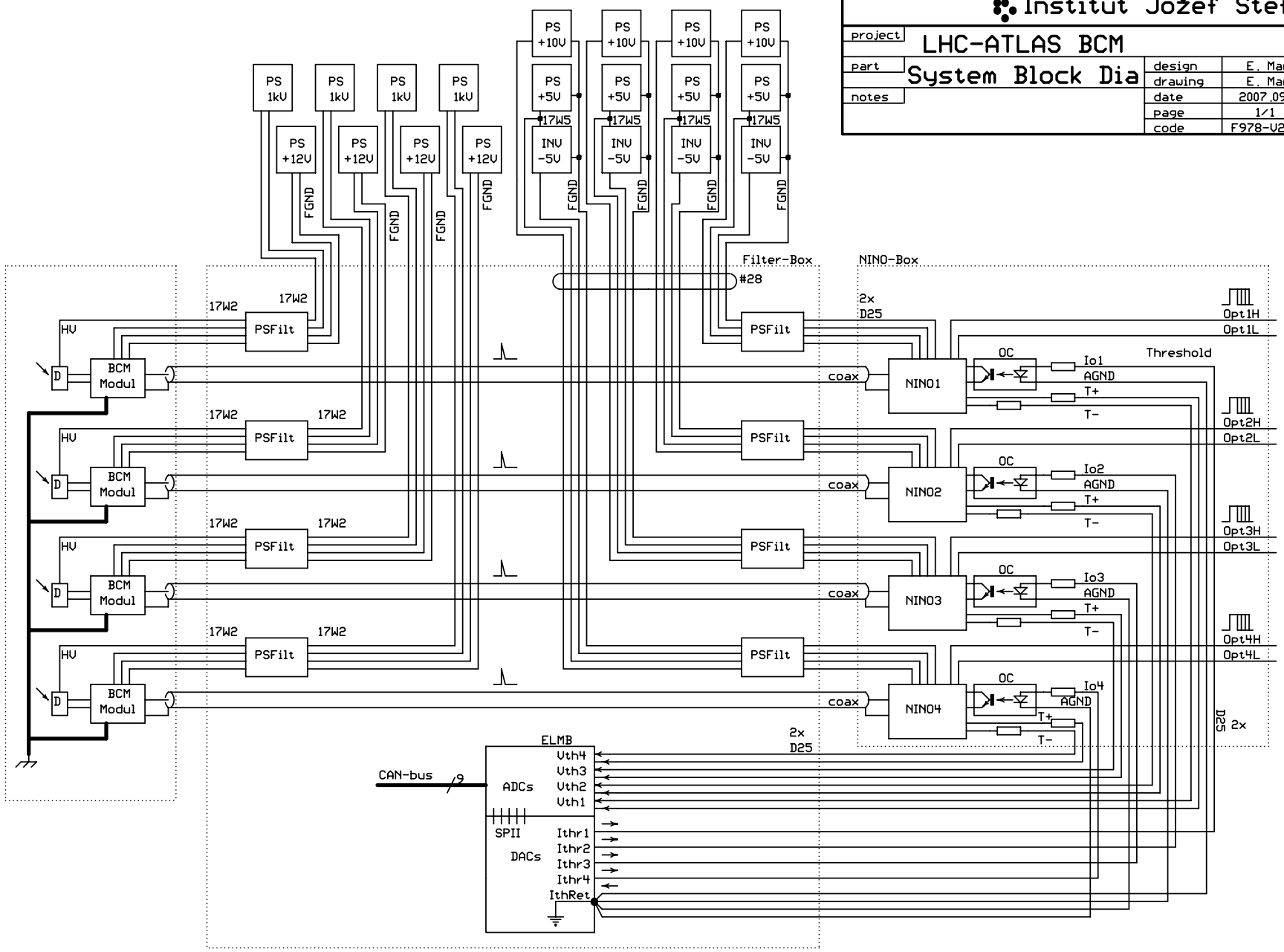
Institut Jožef Stefan
project
LHC-ATLAS BCM
part
System Block Dia
notes
design E. Margan
drawing E. Margan
date 2007.09.16.
page 1/1
code F978-V2-X1
PS 1kV
PS +12V
PS +10V
PS +5V
INV -5V
17W5
FGND
Filter-Box
#28
NINO-Box
17W2
PSFilt
HV
D
BCM Modul
coax
NINO1
NINO2
NINO3
NINO4
OC
Io1
Io2
Io3
Io4
AGND
T+
T-
Threshold
Opt1H
Opt1L
Opt2H
Opt2L
Opt3H
Opt3L
Opt4H
Opt4L
2x
D25
ELMB
ADCs
Vth4
Vth3
Vth2
Vth1
SPII
DACs
Ithr1
Ithr2
Ithr3
Ithr4
IthRet
CAN-bus
9