Truth table

Ctrl-Reg Bit	3		2	1		0		
Port mnemonic / Function	SLCTin / SELECT		INIT / ADDR/DATA	AutoFdXt / W/R		STROBE / STROBE		Operation
	Prog	Port	Prog=Port	Prog	Port	Prog	Port	
	1	0	x	x	x		x	No operation - disabled
	1	0	1	1	0	1	0	Reset
	0	1	0	1	0	↑	↓	Write addr into A register
	0	1	1	1	0	↑	↓	Write data to D register
	0	1	0	1	0	0	1	Read D data, high-nibble
	0	1	1	1	0	0	1	Read D data, low-nibble
	0	1	0	0	1	↑	↓	Write addr into A register
	0	1	1	0	1	↑	↓	Read data to D register
	0	1	0	0	1	0	1	Read IRQ status
	0	1	1	0	1	0	1	Read IRQ status

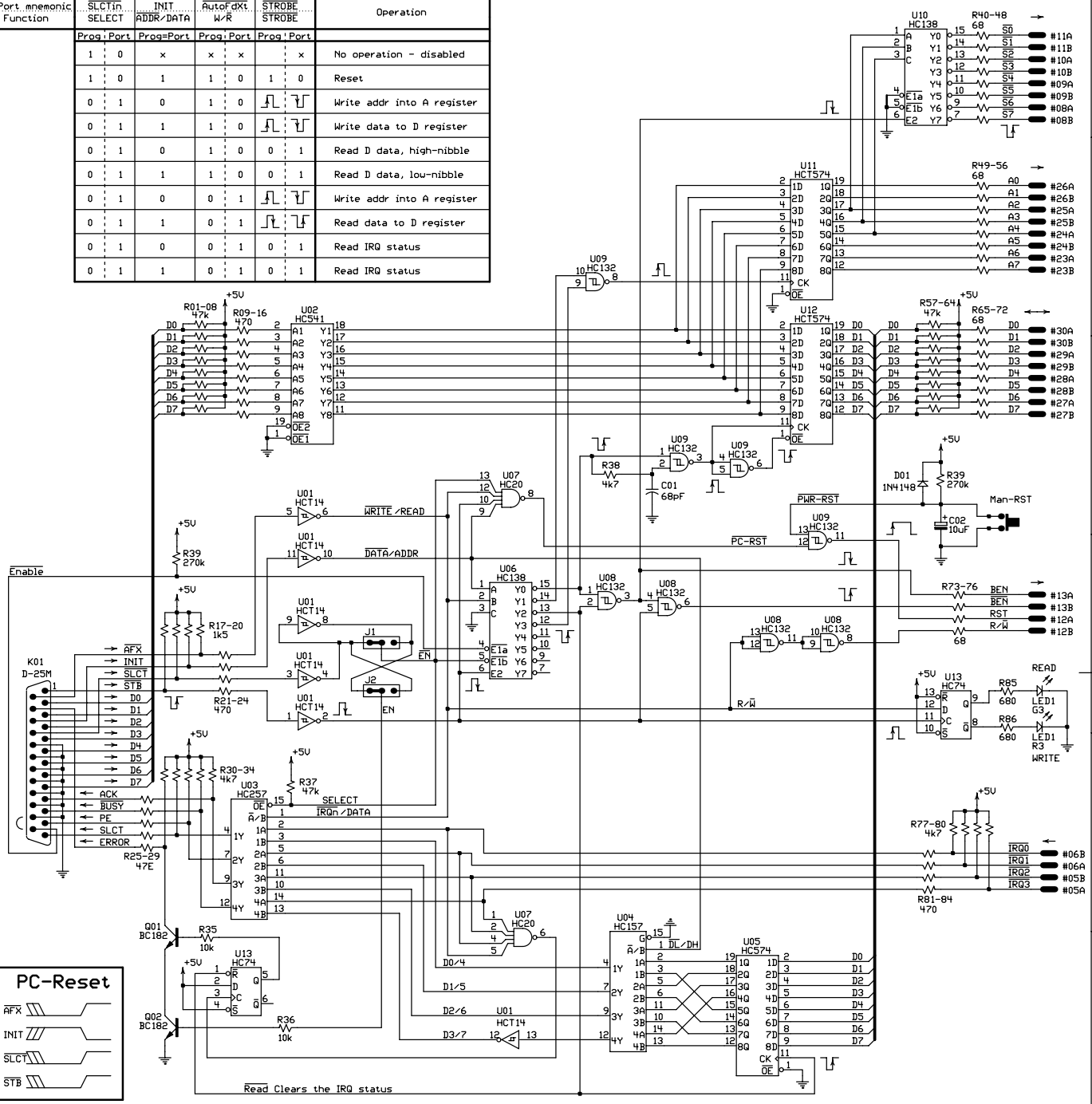

Parallel Port Address Map

Port	Data-Reg.(base)	Status-Reg.	Control-Reg.
LPT1	0x378	0x379	0x37A
LPT2	0x278	0x279	0x27A
LPT3	0x3BC	0x3BD	0x3BE

NOTE : Some PCs have LPT1 ⟷ LPT3

Status-Reg.

Bit	Function	pin	inverted
0,1,2	not used	-	-
3	ERROR	15	no
4	SLCT (on-line)	13	no
5	PE (paper out)	12	no
6	ACK (IRQ)	10	no
7	BUSY	11	yes

Control-Reg

Bit	Function	pin	inverted
0	STROBE	1	yes
1	AUTO-FD-XT	14	yes
2	INIT	16	no
3	SLCT-in	17	yes
4	IRQ-Enable (IRQ7)	-	-
5,6,7	not used	-	-

Data Read

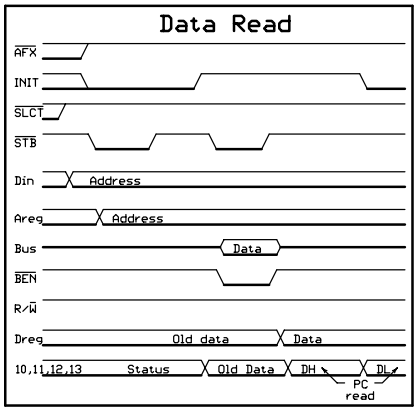

Data Write

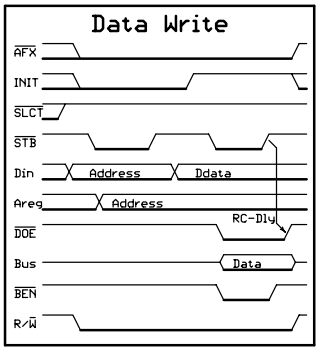

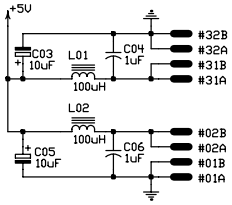

Institut Jožef Stefan, Ljubljana			
projekt/naloga :	Cable & DPPx1 Test System		
sestavni del :	PRN-to-Bus Ifc.	načrtoval	E. Margan
		risal	E. Margan
pripombe :	tolerance uporov 5 %	datum-0	1987.10.19
	tolerance kondenzatorjev 20 %	datum-z	2005.05.12.
		datoteka	PRN2BUS0.SCH