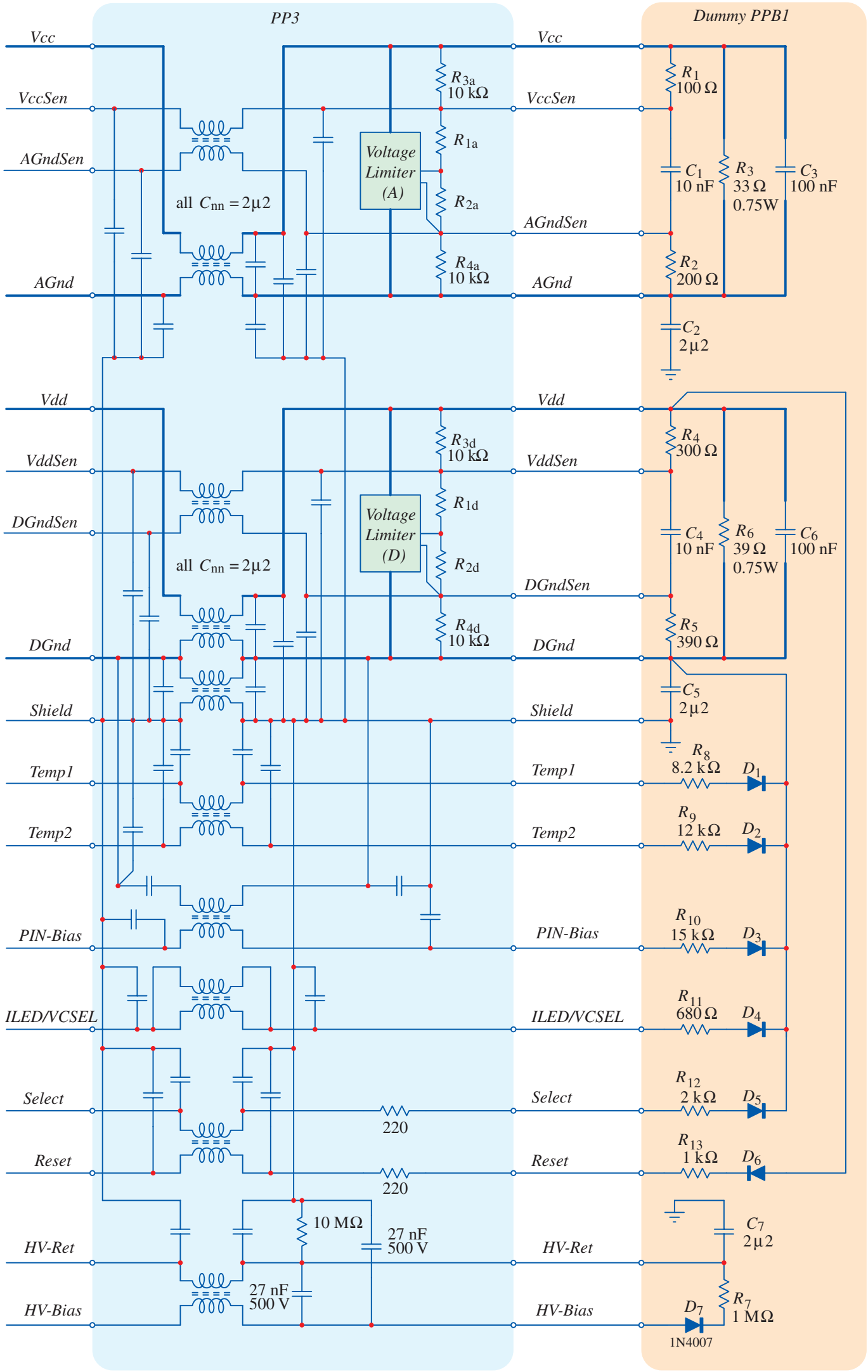
PP3
Dummy PPB1
Vcc
VccSen
AGndSen
AGnd
Vdd
VddSen
DGndSen
DGnd
Shield
Temp1
Temp2
PIN-Bias
ILED/VCSEL
Select
Reset
HV-Ret
HV-Bias
all C_{nn} = 2µ2
Voltage Limiter (A)
Voltage Limiter (D)
R_{3a} 10 kΩ
R_{1a}
R_{2a}
R_{4a} 10 kΩ
R_{3d} 10 kΩ
R_{1d}
R_{2d}
R_{4d} 10 kΩ
R_1 100 Ω
C_1 10 nF
R_3 33 Ω 0.75W
C_3 100 nF
R_2 200 Ω
C_2 2µ2
R_4 300 Ω
C_4 10 nF
R_6 39 Ω 0.75W
C_6 100 nF
R_5 390 Ω
C_5 2µ2
R_8 8.2 kΩ
D_1
R_9 12 kΩ
D_2
R_{10} 15 kΩ
D_3
R_{11} 680 Ω
D_4
R_{12} 2 kΩ
D_5
R_{13} 1 kΩ
D_6
220
220
10 MΩ
27 nF 500 V
27 nF 500 V
C_7 2µ2
R_7 1 MΩ
D_7
1N4007