(2.00:1) CAM350 V 7.0 : Wed Dec 15 09:40:44 2004 - (Untitled)

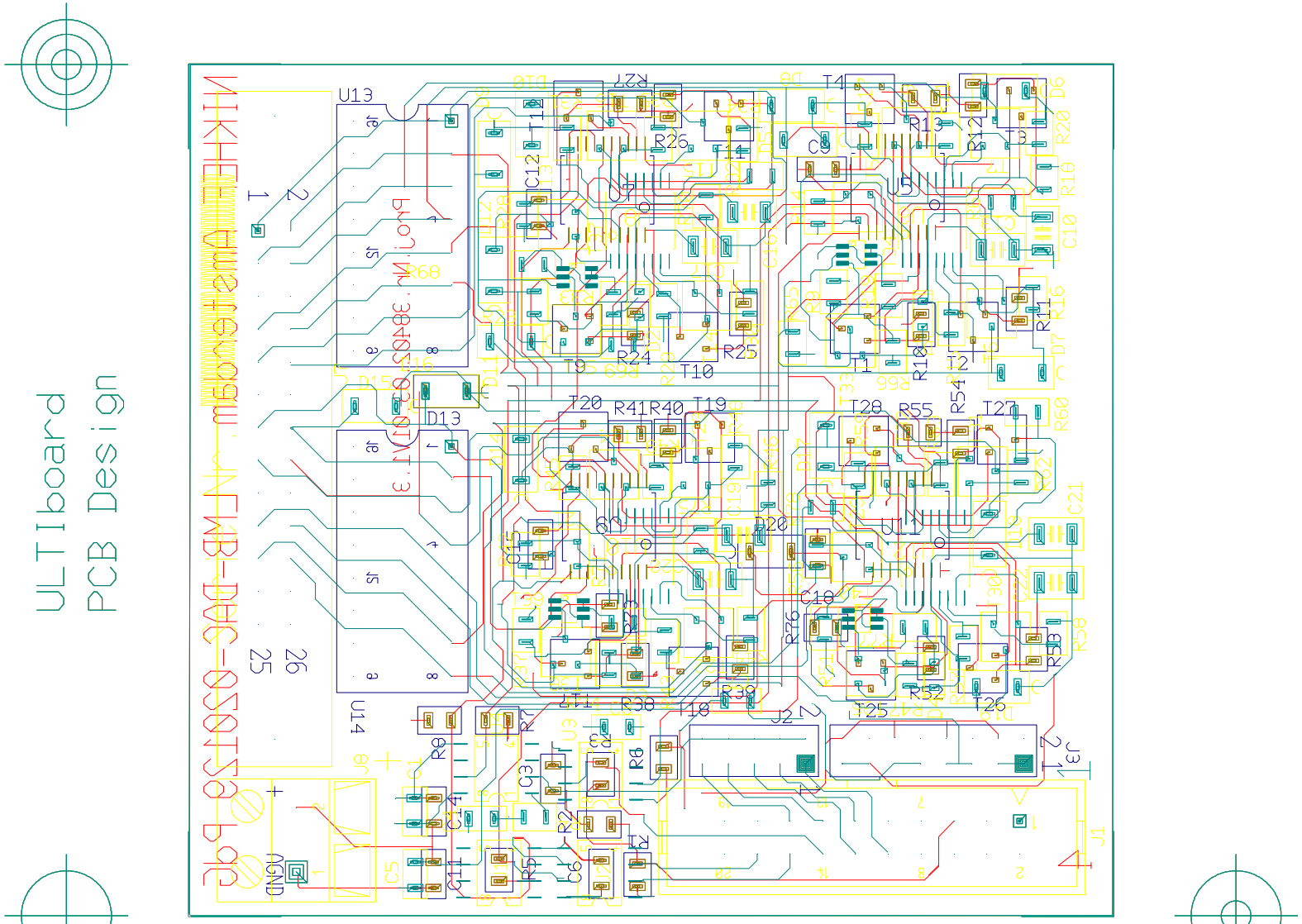

ELMB_DAC_v3, Bottom Sep 07, 2004 (17:00:00) PCB CAM350 V 7.0 RC

Drill Ref Pnt: 0.38100, 0.63500 (mm)