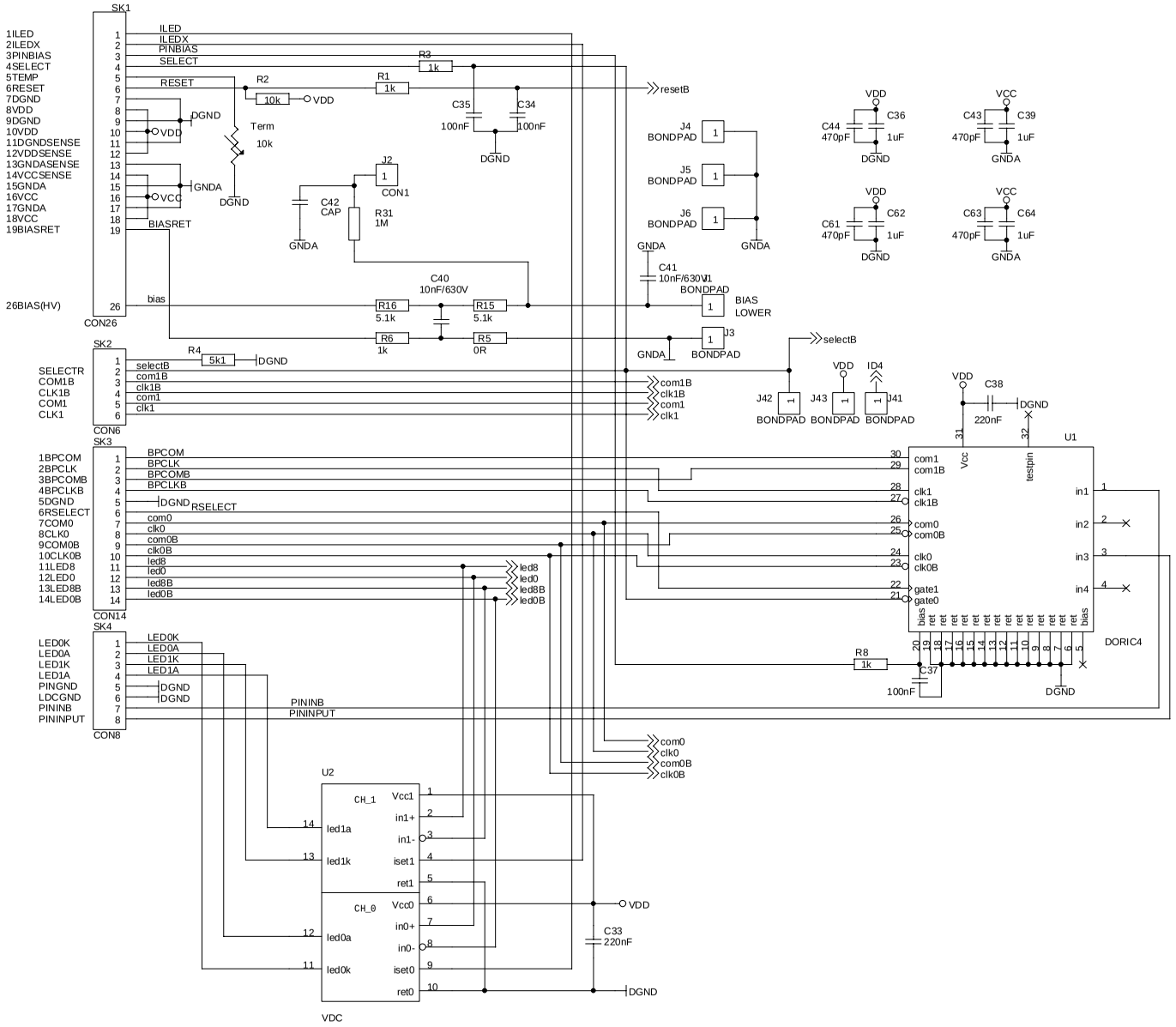

Title	Fakultät für Physik/Uni Freiburg/Kienzler	
Size A4	Document Number K5-Hybrid	Rev 0
Date: Thursday, May 16, 2002	Sheet 1 of 7	